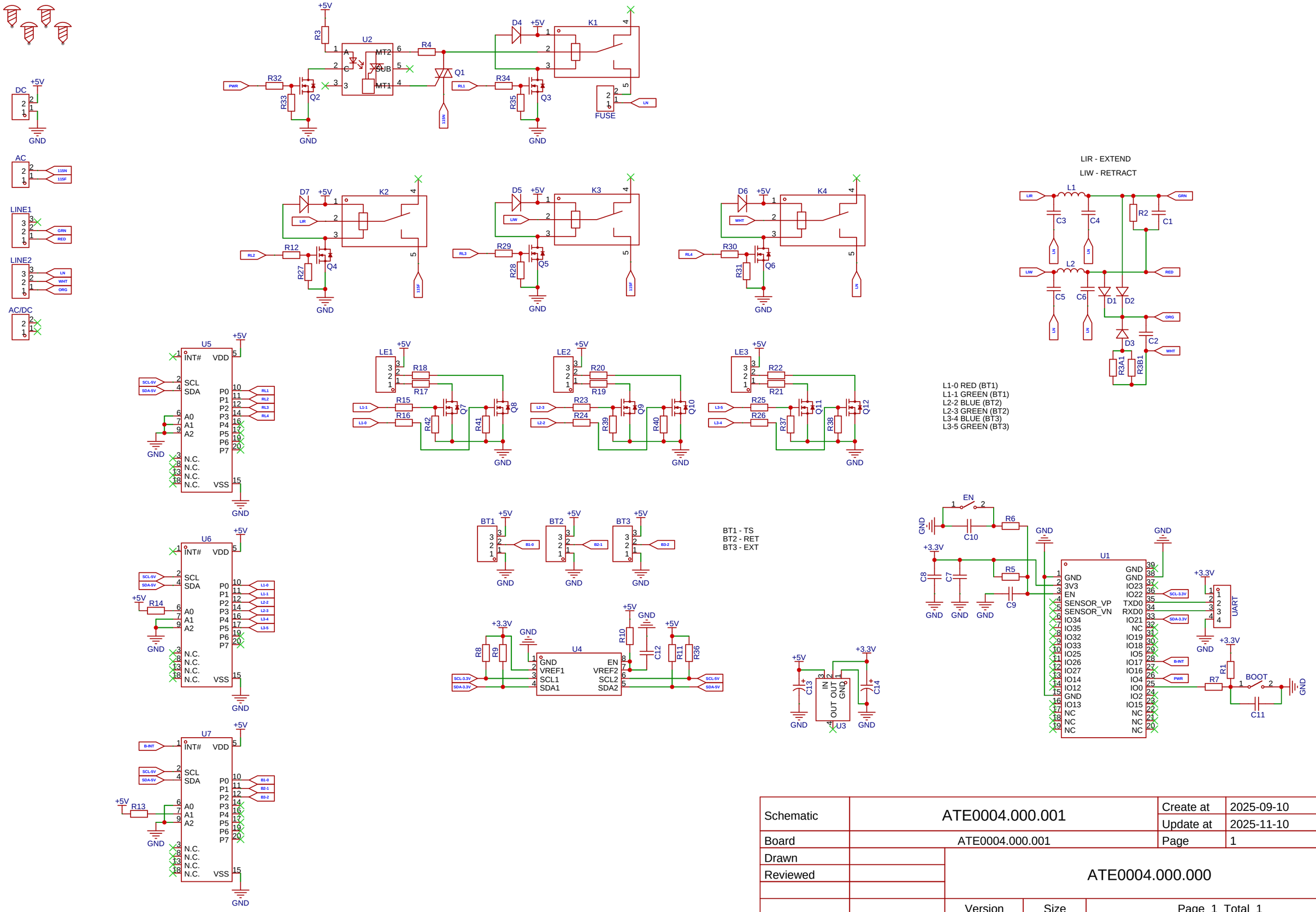

Schematic	ATE0004.000.001	Create at	2025-09-10
		Update at	2025-11-10
Board	ATE0004.000.001	Page	1
Drawn	ATE0004.000.000		
Reviewed			
		Version	Size
		V1.0	A3
		Page 1 Total 1	

EasyEDA